OKLAHOMA SCHOOL TESTING PROGRAM

TEST BLUEPRINT AND ITEM SPECIFICATIONS

MATHEMATICS GRADE 5

OKLAHOMA STATE DEPARTMENT OF EDUCATION
CHAMPION EXCELLENCE

TABLE OF CONTENTS

Grade 5 Mathematics Test

Purpose

A robust assessment system is predicated upon the knowledge that no one assessment is able to provide answers to all questions affecting instructional decisions. An assessment system utilizes different types of assessment to gather multiple pieces of evidence to provide timely, relevant, actionable, and reliable information about what students know and can do relative to a set of standards.

According to the Oklahoma ESSA Plan (pp 48–49):

Oklahoma recognizes that a **robust assessment system** is tied closely to students' learning and teachers' instructional practices by valuing and promoting **local, classroom-based formative assessments** that help make **student learning visible**. At the same time, that system should provide a **strong summative assessment** program that fits as a component within a multifaceted state, district, and school accountability system.

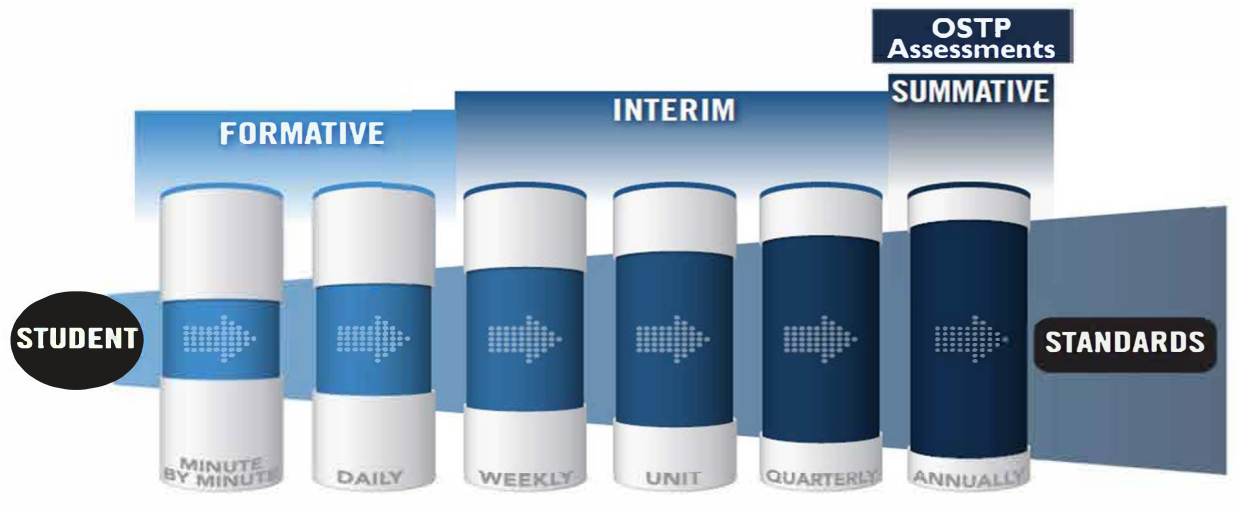

The OSDE supports an assessment system by working with Oklahoma educators and stakeholders to:

- Ensure that state and federally required annual summative assessments delivered through the Oklahoma School Testing Program (OSTP) are effective and meaningful to families, districts, educators, and members of the community;
- Develop instructional resources to support local formative and interim assessments through the curriculum frameworks projects and assessment guidance toolkit; and
- Build and deliver professional learning through face-to-face and web-based resources to support local assessment needs and interpretation of state assessment data.

Annual assessments delivered through the OSTP are aligned to the Oklahoma Academic Standards and can therefore provide point-in-time data for programmatic and curricular decisions by supporting criterion-referenced interpretations at appropriate levels and grain size (e.g., grade, student group, teacher, building/district administrator, state). Standards-based formative and interim assessments conducted at the local level can provide additional information and evidence

of learning at a smaller grain size to inform instructional decisions made at the student and classroom level.

While state summative assessments are only one measure of what students know and can do, having Oklahoma students take OSTP assessments:

- ✓ Helps students, their families, and the public know how students have grown over time and how they are performing relative to the standards, their peers in Oklahoma, and the nation;
- ✓ Enables teachers to see how their students are performing against grade-level expectations communicated through the Performance Level Descriptors (PLDs) to support evaluation and enhancement of curriculum and programs for the next school year;
- ✓ Provides a standardized and reliable measure for school/district leaders, the state, policymakers, and the public to determine how well a system is meeting the goals of helping every child grow along a continuum to prepare them for careers, college, and life; and
- ✓ Provides comparable information and data to inform continuous improvement of a system and appropriately support federal and state accountability decisions.

Test Structure, Format, and Scoring

The Grade 5 Mathematics test will consist of 50 operational items and 10 field-test items, written at a reading level about two grade levels below a Grade 5 audience, and includes four responses from which to choose: the correct answer and three distractors. The total 60 items will be divided into two test sections.

Each item is scored as correct or incorrect. Only operational items contribute to the total test score. Thus, for example, if a test contains 50 operational items, only those 50 items (not the 10 field-test items) contribute to a student's scaled score on the test.

The student's raw score is converted to a scaled score using the number correct scoring method.

Test Alignment with Oklahoma Academic Standards (OAS)

Criteria for Aligning the Test with the Oklahoma Academic Standards Content Strands and Standards
1. Categorical Concurrence The test is constructed so that there are at least six items measuring each OAS strand. The number of items, six, is based on estimating the number of items that could produce a reasonably reliable estimate of a student's mastery of the content measured.
2. Range-of-Knowledge Correspondence The test is constructed so that every standard for each OAS strand has at least one corresponding assessment item.
3. Source of Challenge Each test item is constructed in such a way that the major cognitive demand comes directly from the targeted OAS strand or standard being assessed, not from specialized knowledge or cultural background that the test-taker may bring to the testing situation.

OKLAHOMA SCHOOL TESTING PROGRAM

TEST BLUEPRINT MATHEMATICS GRADE 5

This blueprint describes the content and structure of an assessment and defines the ideal number of test items by strand and standard of the Oklahoma Academic Standards (OAS).

IDEAL % OF ITEMS	STRANDS AND STANDARDS
44–48%	**NUMBER AND OPERATIONS** 5.N.1 Division of Multi-digit Numbers 5.N.2 Fractions and Decimals 5.N.3 Add and Subtract Rational Numbers
16–20%	**ALGEBRAIC REASONING AND ALGEBRA** 5.A.1 Numerical Patterns and Graphs 5.A.2 Equations and Inequalities
22–26%	**GEOMETRY AND MEASUREMENT** 5.GM.1 Polygons and Polyhedra 5.GM.2 Volume and Surface Area 5.GM.3 Angles
12–18%	**DATA AND PROBABILITY** 5.D.1 Data Analysis
100%	**TOTAL: 50 ITEMS**

(Please note this blueprint does not include items that may be field-tested.)
A minimum of 6 items is required to report a strand.

Depth-of-Knowledge Assessed by Test Items

The Grade 5 test will approximately reflect the following "depth-of-knowledge (DOK)" distribution of items:

Depth-of-Knowledge	Percent of Items
Level 1—Recall and Reproduction	20–30%
Level 2—Skills and Concepts	65–75%
Level 3—Strategic Thinking	5–15%

DOK Ranges are based on the DOK of the OAS. The standards increase grade-level expectations and rigor, and set expectations for students to be college- and career-ready.

- **Level 1** (Recall and Reproduction) requires the student to recall facts, terms, definitions, or simple procedures, perform simple algorithms or apply formulas. One-step, well-defined, or straight algorithmic procedures should be included at this level.
- **Level 2** (Skills and Concepts) requires the student to make some decisions as to how to approach the problem or activity. Level 2 activities include making observations and collecting data; classifying, comparing, and organizing data; and organizing and displaying data in tables, charts, and graphs.
- **Level 3** (Strategic Thinking) requires reasoning, planning, using evidence, and a higher level of thinking. Level 3 activities include making conjectures, drawing conclusions from observations, citing evidence and developing a logical argument for concepts, explaining phenomena in terms of concepts, and using concepts to solve nonroutine problems.

Note: These descriptions are adapted from Review Background Information and Instructions, Standards and Assessment Alignment Analysis, CCSSO TILSA Alignment Study, May 21–24, 2001, Version 2.0. For an extended description of each depth-of-knowledge level, see the web site at http://facstaff.wcer.wisc.edu/normw/TILSA/INFO and INSTR Align Anal 513.pdf.

Universal Design Considerations

Universal Design, as applied to assessments, is a concept that allows the widest possible range of students to participate in assessments and may even reduce the need for accommodations and alternative assessments by expanding access to the tests themselves. In the Oklahoma Grade 5 tests, modifications have been made to some items to simplify and clarify instructions as well as to provide maximum readability, comprehensibility, and legibility. This includes such design aspects as reducing the language load in content areas other than Language Arts, increasing the font size, displaying fewer items per page, and boxing the items to assist visual focus.

Online Administration

Test questions will be presented one at a time.

The stimulus and question will appear on the screen at the same time.

Answers may be selected by using the mouse to click on the radio button to the left of the answer choice.

Navigation buttons appear at the bottom of the page for each question. For longer items, a scroll bar will appear on the right-hand side of the window to allow scrolling through the answer choices.

Tools appear at the bottom of the screen/page to aid in answering questions.

Students will be able to use scratch paper for all online assessments. This paper must be taken up and destroyed by the test administrator immediately following the test. The test administrator must not look at what the student has written on the scratch paper.

Testing Schedules

This section appears in all of the test specification documents and is provided to give the reader a general sense of the overall testing program at this particular grade level.

Each Grade 5 test is meant to be administered in two sessions within one day with a break given between sessions or on consecutive days. Estimated time for scheduling purposes is given in the table below.

Grade 5 Mathematics Online Test Time Schedule	
Distributing login information	Approximately 5 minutes
Test instructions/tutorial and reviewing sample items	Approximately 15 minutes
Total:	Approximately 20 minutes
Administering Section 1 of the G5 Mathematics Online Test	Approximately 30-40 minutes
Administering Section 2 of the G5 Mathematics Online Test	Approximately 30-40 minutes

Item Types

The test will consist of a combination of multiple choice and technology enhanced items.

Most stems are positively worded—avoiding the use of the word “not.” If a negative is required, it is underlined for emphasis (e.g., if a bag has the same number of red, blue, and black marbles, what is the probability that a marble randomly selected from the bag is <u>not</u> red?).

Multiple-Choice Item Guidelines

- All items must clearly indicate what is expected in a response and direct students to focus on their responses.
- Each multiple-choice item has a stem (question, statement, and/or graphic component) and four answer options—the correct answer and three distractors. Distractors will be developed based on the types of errors students are most likely to make.
- Multiple-choice item stems ask a question or pose a clear problem so that students will know what to do before looking at the answer choices. Students should not need to read all answer choices before knowing what is expected. A stem will seldom include an incomplete sentence.

Technology Enhanced Item Guidelines

- Technology Enhanced Items (TEIs) should be used to more authentically address some aspects of the OAS performance expectations and/or provide more opportunity for students to construct rather than select their response.
- Interaction types vary. Reference sample items for the various types of TEIs. Each TEI contains only one interaction type per item.
- For each TEI, the interaction type used is that which is the most appropriate and enhancing to the construct to be measured.
- Each TEI is structured to contain the question (content) first followed by directions for how to complete the interaction in that item. Consistent style and language are used in these directions (e.g., "Drag the pictures," "Click the object," etc).

Stimulus Materials

Stimulus materials are the tables, charts, graphs, passages, and illustrations students must use in order to respond to items. The following characteristics are necessary for stimulus materials:

1. A stimulus that gives information must precede a question or a set of questions.
2. When students are given information to evaluate, they should know the question and the purpose of the information.
3. Passages, graphics, tables, etc., provide sufficient information for assessment of multiple objectives.
4. Stimulus materials for a set of items may be a combination of multiple stimuli.
5. Information in stimulus materials is based on situations students would encounter in or beyond school.
6. For conceptual items, stimulus materials are necessary but not conceptually sufficient for student response.
7. There is a balance of graphic and textual stimulus materials within a test form. Approximately 50 percent of the items will have appropriate pictorial or graphical representations. Graphs, tables, or figures are clearly associated with their intended items. Graphics appear on the same page as the textual stimulus or on the facing page.

General Considerations—Oklahoma School Testing Program

1. Items deal with issues and details that are of consequence in the stimulus and central to students' understanding and interpretation of the stimulus.
2. Test items are varied and address all OAS standards listed in the Test Blueprint.
3. To the greatest extent possible, no item or response choice clues the answer to any other item.
4. All items reviewed and approved by the Oklahoma Item Review Committee are assigned an OAS strand, standard, and/or objective. The Test Blueprints and score reports reflect the degree to which each OAS strand is represented on the test.
5. Test items are tied closely and particularly to the stimuli from which they derive, so that the impact of outside (prior) knowledge, while never wholly avoidable, is minimized.
6. Each multiple-choice item contains a question and four answer options, only one of which is correct. Correct answers will be approximately equally distributed among A, B, C, and D responses.
7. Distractors adopt the language and sense of the material in the stimuli so that students must think their way to the correct answer rather than simply identify incorrect responses by virtue of a distractor's obviously inappropriate nature.
8. Distractors should always be plausible (but, of course, incorrect) in the context of the stimulus. Students should not be able to rule out a wrong answer or identify a correct response solely because it looks different from the other answer choices.
9. Order of presentation of item types is dictated by logic (chronological, spatial, etc.).
10. Items are worded precisely and clearly. The better focused an item, the more reliable and fair it is certain to be, and the more likely all students will understand it in the same way.
11. The range of items measuring an OAS standard consisting of more than one skill will provide a balanced representation of those skills.
12. Items should be focused on what all students should know and be able to do as they complete their Grade 5 coursework.
13. The responses "Both of the above," "All of the above," "None of the above," and "Neither of the above" will not be used.
14. The material presented is balanced, culturally diverse, well written, and of interest to Grade 5 test level students. The stimuli and items are fairly presented in order to gain a true picture of students' skills.
15. Across all forms, a balance of gender and active/passive roles by gender is maintained.
16. Forms attempt to represent the ethnic diversity of Oklahoma students.
17. Calculators, formula sheets, and other resource materials may not be used on the Grade 5 Mathematics test. More information regarding the calculator policy can be found at http://sde.ok.gov/sde/assessment-administrator-resources-administrators.
18. The stimuli avoid subject matter that might prompt emotional distress on the part of the students.
19. Permission to use stimuli from copyrighted material is obtained as necessary by testing vendor.

Considerations Specific to the Grade 5 Mathematics Test

It is necessary to create test items that are reliable, fair, and targeted to the Oklahoma Academic Standards listed on the following pages. There are some general considerations and procedures for effective item development.

These considerations include, but are not limited to, the following:

1. Each test form contains items assessing all content standards.
2. Test items that assess each standard are not limited to one particular type of response format.
3. Test questions attempt to focus on content that is authentic and that Grade 5 level students can relate to and understand.
4. Test items are worded precisely and clearly. The better focused an item, the more reliable and fair it is likely to be, and the more likely all students will understand what is required of them.
5. All items are reviewed to eliminate language that shows bias or that would otherwise likely disadvantage a particular group of students. That is, items do not display unfair representations of gender, race, ethnicity, disability, culture, or religion; nor do items contain elements that are offensive to any such groups.
6. Items are written so that calculations are kept to a minimum, and numbers are selected to minimize the time spent on computations.
7. All test items and answer choices have appropriate labels and units.
8. Most graphs are placed on a gray grid, with the x- and y-axes labeled and marked.

All items developed using these specifications are reviewed annually by Oklahoma educators and approved by the Oklahoma State Department of Education. The distribution of newly developed items is based on difficulty, cognitive ability, percentage of art/graphics, and grade-level appropriateness as determined by an annual Item Development Plan approved by the Oklahoma State Department of Education.

Overview of Item Specifications

For each OAS strand, item specifications are organized under the following headings:

- OAS Strand
- OAS Standard
- OAS Objectives
- Item Specifications
    a. Emphasis
    b. Stimulus Attributes
    c. Format
    d. Content Limits
    e. Primary Process Standard(s)
    f. Distractor Domain
    g. Sample Test Items

The headings "OAS Strands" and "OAS Standards" state the OAS strand followed by the OAS standard being measured in the mathematics section of the Oklahoma Academic Standards document.

For each standard, the information under the heading "Item Specifications" highlights important points about a test item's emphasis, format, content limits, and distractor domain. Sample test items are provided with each strand to illustrate these specifications. Although it is sometimes possible to score single items for more than one concept, all items in these tests are written to address a single objective as the primary concept.

Note: With the exception of content limits, the Item Specifications offer suggestions of what might be included and do not provide an exhaustive list of what can be included. For this reason, Item Specifications are only meant to be a supplemental resource for classroom instruction.

In addition, the sample test items are not intended to be definitive in nature or construction—the stimuli and the test items that follow them may differ from test form to test form, as may their presentations. Sample test items are not intended to predict a student's performance on the actual test, but rather to allow students to familiarize themselves with the item types and formats that they may see on the test.

STANDARDS & SAMPLE ITEMS

OAS STRAND—NUMBER & OPERATIONS (N): STANDARD 5.N.1

OAS STANDARD	**5.N.1**	Divide multi-digit numbers and solve real-world and mathematical problems using arithmetic.
OAS OBJECTIVES	**5.N.1.1**	Estimate solutions to division problems in order to assess the reasonableness of results.
	5.N.1.2	Divide multi-digit numbers, by one- and two-digit divisors, using efficient and generalizable procedures, based on knowledge of place value, including standard algorithms.
	5.N.1.3	Recognize that quotients can be represented in a variety of ways, including a whole number with a remainder, a fraction or mixed number, or a decimal and consider the context in which a problem is situated to select and interpret the most useful form of the quotient for the solution.
	5.N.1.4	Solve real-world and mathematical problems requiring addition, subtraction, multiplication, and division of multi-digit whole numbers. Use various strategies, including the inverse relationships between operations, the use of technology, and the context of the problem to assess the reasonableness of results.

ITEM SPECIFICATIONS

Emphasis:

- Estimate solutions to division problems.
- Determine the reasonableness of solutions to arithmetic problems.
- Use the context of a problem to determine the best format to represent a quotient.
- Solve real-world and mathematical problems requiring addition, subtraction, multiplication, and division of multi-digit whole numbers.

Stimulus Attributes:

- Test items may include tables, charts, pictures, counters, graphs, base-10 blocks, cubes, and other counting manipulatives.

Format:

- Use estimation of quotients
- Divide multi-digit whole numbers by one- and two-digit divisors with and without remainders expressed as whole numbers or fractions
- Use addition, subtraction, multiplication, or division to solve real-world problems
- Assess the reasonableness of results
- Identify and interpret the context of a problem to find the best form of a quotient for the solution

ITEM SPECIFICATIONS

Content Limits:

- Limit divisors to up to two digits
- Limit dividends to two or three digits
- Limit items to three-digit by three-digit multiplication
- Limit to operations on whole numbers
- Limit decimal quotients to hundredths
- Limit real-world and mathematical contexts to age appropriate situations

Primary Process Standards:

- Develop Strategies for Problem Solving
- Develop the Ability to Communicate Mathematically
- Develop a Deep and Flexible Conceptual Understanding

Distractor Domain:

- Computational errors
- Error in expression of remainder as fraction
- Rounding errors
- Regrouping errors
- Error in using inverse operation

1 **The art teacher had 450 sheets of construction paper on the first school day. The art students used 18 sheets during each school day. How many school days did the construction paper last?**

A 21

B 22

C 24

D 25

Standard: 5.N.1.2 Divide multi-digit numbers, by one- and two-digit divisors, using efficient and generalizable procedures, based on knowledge of place value, including standard algorithms.

Depth-of-Knowledge: 2

This item is a DOK 2 because it requires the student to determine what operation to use before completing the division.

Distractor Rationale:

A. The student made a computational error.

B. The student rounded 18 to 20, then chose the closest value.

C. The student made a computational error.

D. Correct. The student demonstrated an ability to divide a multi-digit number by a two-digit divisor.

2 **A student sorted 950 crayons into boxes that hold 36 crayons each. How many more crayons will the student need to completely fill the last box?**

A 6

B 14

C 22

D 30

Standard: 5.N.1.4 Solve real-world and mathematical problems requiring addition, subtraction, multiplication, and division of multi-digit whole numbers. Use various strategies, including the inverse relationships between operations, the use of technology, and the context of the problem to assess the reasonableness of results.

Depth-of-Knowledge: 3

This item is a DOK 3 because it requires the student to solve a non-routine problem. The student must first find the amount that will be left over and then decide how to use this to determine the number needed to completely fill the last box.

Distractor Rationale:

A. The student focused on the ones place of the quotient.

B. The student identified the remainder after dividing.

C. Correct. The student demonstrated an ability to solve a real-world problem requiring division of multi-digit whole numbers.

D. The student estimated the answer by dividing 900 by 30.

OAS STRAND—NUMBER & OPERATIONS (N): STANDARD 5.N.2

OAS STANDARD

5.N.2 Read, write, represent, and compare fractions and decimals; recognize and write equivalent fractions; convert between fractions and decimals; use fractions and decimals in real-world and mathematical situations.

OAS OBJECTIVES

5.N.2.1 Represent decimal fractions (e.g., $\frac{1}{10}, \frac{1}{100}$) using a variety of models (e.g., 10 × 10 grids, rational number wheels, base-10 blocks, meter sticks) and make connections between fractions and decimals.

5.N.2.2 Represent, read, and write decimals using place value to describe decimal numbers including fractional numbers as small as thousandths and whole numbers as large as millions.

5.N.2.3 Compare and order fractions and decimals, including mixed numbers and fractions less than one, and locate on a number line.

5.N.2.4 Recognize and generate equivalent decimals, fractions, mixed numbers, and fractions less than one in various contexts.

ITEM SPECIFICATIONS

Emphasis:

- Translate among different representations of decimals and fractions.
- Demonstrate knowledge of the connections among rational numbers represented as fractions and decimals.
- Represent, read, and write decimals using place value.
- Compare and order fractions and decimals, including mixed numbers.
- Recognize and generate equivalent decimals, fractions, and mixed numbers.

Stimulus Attributes:

- Test items may include rational number wheels, pictures, models, fraction strips, diagrams, tables, graphs, number lines, base-10 blocks, 10 × 10 grids, cubes, sticks, other counting manipulatives, and meter sticks.

Format:

- Read decimals in words
- Write decimals as words
- Write decimals using place value
- Represent decimals and using place value
- Represent decimals using a variety of models
- Identify connections among representations of decimals
- Organize representations of decimals
- Translate among representations of decimals
- Recognize and generate equivalent forms of fractions and decimals
- Generate equivalent fractions
- Locate fractions and decimals on a number line

ITEM SPECIFICATIONS

Content Limits:

- Limit whole numbers to seven digits
- Limit to not-repeating decimals through the thousandths place
- Limit fractions to halves, thirds, fourths, fifths, eighths, and tenths in items that include both decimals and fractions
- Limit comparison to three objects
- Limit ordering to four objects

Primary Process Standards:

- Develop Strategies for Problem Solving
- Develop the Ability to Communicate Mathematically
- Develop Mathematical Reasoning
- Develop a Deep and Flexible Conceptual Understanding
- Develop the Ability to Make Conjectures, Model, and Generalize

Distractor Domain:

- Misrepresentation of numbers
- Error in translation
- Computational errors
- Conversion errors
- Incorrect models
- Misrepresentation of place value
- Conceptual errors in number sense

3

This model represents 1.

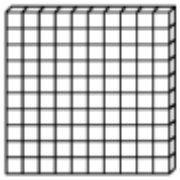

Match the model in the left column to the correct fraction in the right column. Each model in the left column matches to only one fraction in the right column. Click one model on the left and then click its match on the right. To remove a connection, hold the pointer over the line until it turns red, and then click it.

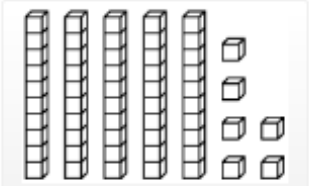

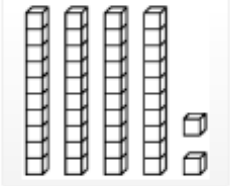

$\frac{1}{10}$

$\frac{56}{100}$

$\frac{42}{100}$

$\frac{4}{10}$

Standard: 5.N.2.1 Represent decimal fractions (e.g., $\frac{1}{10}, \frac{1}{100}$) using a variety of models (e.g., 10 × 10 grids, rational number wheels, base-10 blocks, meter sticks) and make connections between fractions and decimals.

Depth-of-Knowledge: 1

This item is a DOK 1 because it requires the student to complete a simple procedure, identifying a model that represents a fraction.

3 continued...

Distractor Rationale:

Correct

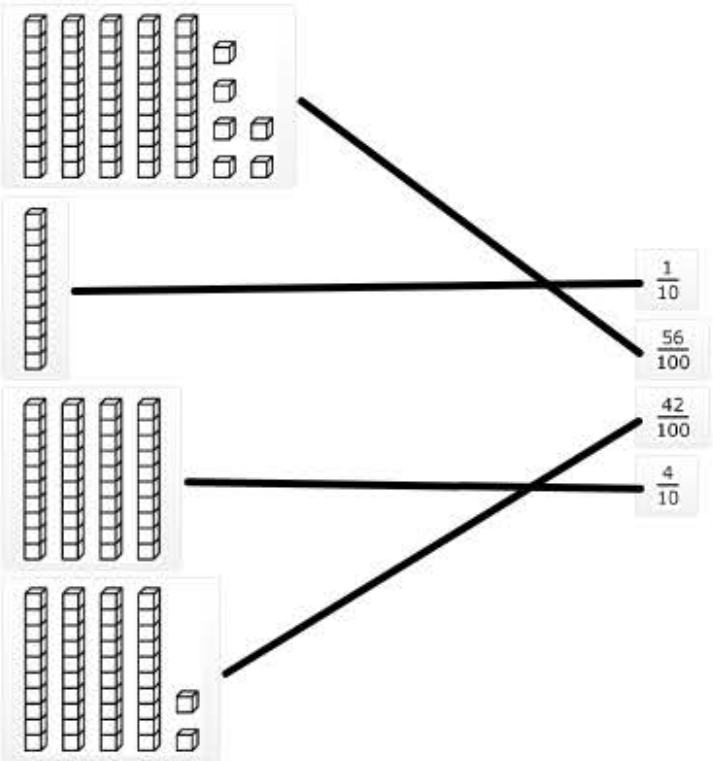

Incorrect

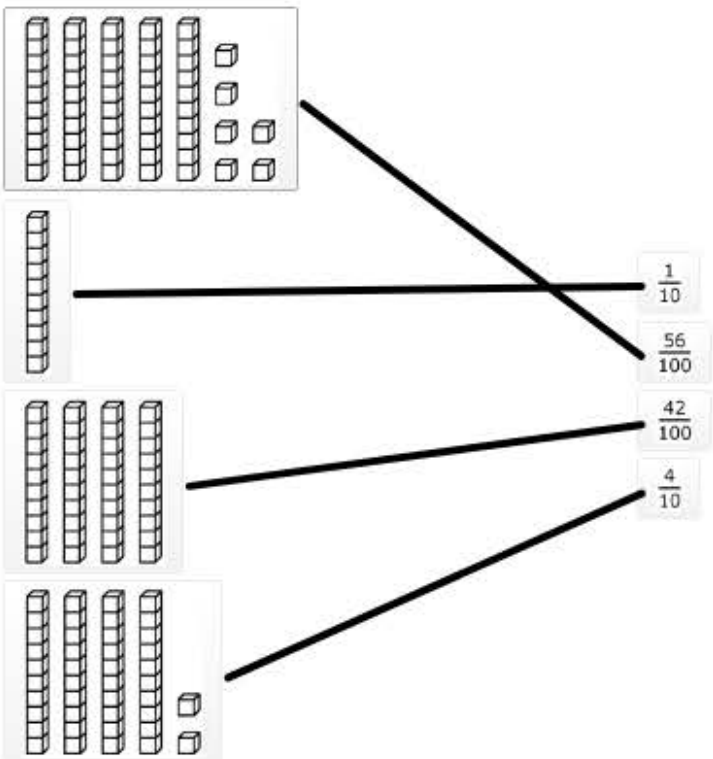

The student ignored the 2 ones and just saw the 4 tens.

4 **Which point on the number line below <u>best</u> represents the location of 4.82?**

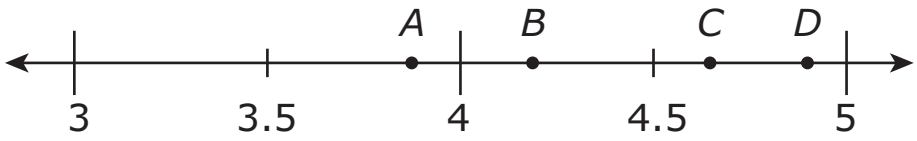

A point *A*

B point *B*

C point *C*

D point *D*

Standard: 5.N.2.3 Compare and order fractions and decimals, including mixed numbers and fractions less than one, and locate on a number line.

Depth-of-Knowledge: 2

This item is a DOK 2 because it requires the student to first know that 4.82 is between 4.5 and 5. The student must then further determine if it is closer to 4.5 or 5 to choose the correct answer.

Distractor Rationale:

A. The student thought 4.82 is to the left of 4.

B. The student confused 4.82 and 4.2.

C. The student knew that 4.82 is more than 4.5, but did not go far enough.

D. Correct. The student demonstrated an ability to locate a decimal on the number line.

5 **In Tara's class, $\frac{2}{5}$ of the students had cereal for breakfast. Which grid has $\frac{2}{5}$ of its area shaded?**

A

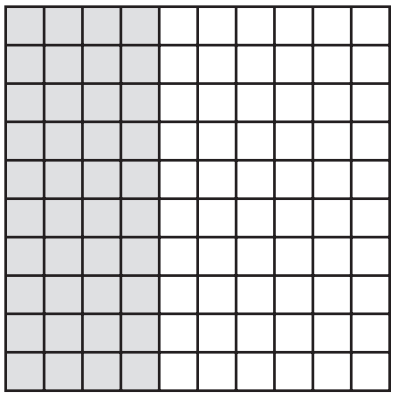

B

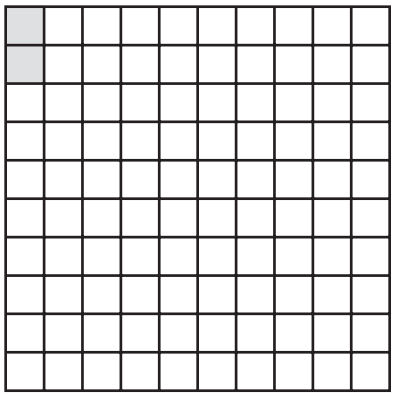

C

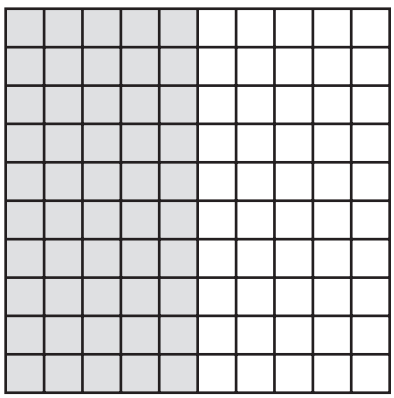

D

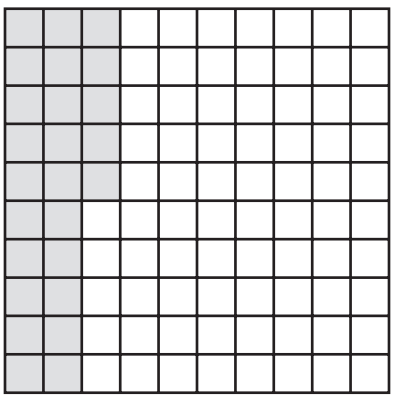

Standard: 5.N.2.4 Recognize and generate equivalent decimals, fractions, mixed numbers, and fractions less than one in various contexts.

Depth-of-Knowledge: 2

This item is a DOK 2 because it requires the student to translate $\frac{2}{5}$ into a model out of 100.

Distractor Rationale:

A. **Correct. The student demonstrated an ability to recognize equivalent decimals, as shown on a hundred grid, and fractions.**

B. The student focused on the numerator.

C. The student focused on the denominator.

D. The student thought $\frac{2}{5}$ was the same as $\frac{25}{100}$.

6 **Which decimal number means the same as $\frac{12}{100}$?**

A 0.012

B 0.12

C 1.2

D 12

Standard: 5.N.2.4 Recognize and generate equivalent decimals, fractions, mixed numbers, and fractions less than one in various contexts.

Depth-of-Knowledge: 1

This item is a DOK 1 because it requires the student to complete a simple procedure, turning a decimal fraction into a decimal.

Distractor Rationale:

A. The student confused hundredths and thousandths.

B. Correct. The student demonstrated an ability to generate an equivalent decimal to a fraction.

C. The student confused hundredths and tenths.

D. The student used the numerator as a whole number.

OAS STRAND—NUMBER & OPERATIONS (N): STANDARD 5.N.3

OAS STANDARD

5.N.3 Add and subtract fractions with like and unlike denominators, mixed numbers, and decimals to solve real-world and mathematical problems.

OAS OBJECTIVES

5.N.3.1 Estimate sums and differences of fractions with like and unlike denominators, mixed numbers, and decimals to assess the reasonableness of the results.

5.N.3.2 Illustrate addition and subtraction of fractions with like and unlike denominators, mixed numbers, and decimals using a variety of representations (e.g., fraction strips, area models, number lines, fraction rods).

5.N.3.3 Add and subtract fractions with like and unlike denominators, mixed numbers, and decimals, using efficient and generalizable procedures, including but not limited to standard algorithms in order to solve real-world and mathematical problems including those involving money, measurement, geometry, and data.

5.N.3.4 Find 0.1 more than a number and 0.1 less than a number. Find 0.01 more than a number and 0.01 less than a number. Find 0.001 more than a number and 0.001 less than a number.

ITEM SPECIFICATIONS

Emphasis:

- Apply estimation or computation skills to find or estimate sums and differences using fractions, mixed numbers, and decimals.
- Illustrate addition and subtraction of fractions, mixed numbers, and decimals.
- Find more than and less than a number using tenths, hundredths, and thousandths.

Stimulus Attributes:

- Test items may include base-10 blocks, cubes, counting manipulatives, fraction strips, two-dimensional figures, tables, graphs, charts, maps, scale drawings, data sets, and other diagrams.

Format:

- Use estimation to determine solutions to real-world situations involving decimals
- Add or subtract decimal numbers with the same or different place values
- Use fractions and mixed numbers to solve problems involving sums and differences in mathematical and real-world contexts (money, measurement, geometry, and data)
- Use estimation of fractions and mixed numbers in real-world applications (money, measurement, geometry, and data)
- Items may include fractions with different denominators
- Items may include conversion from improper fractions to mixed numbers
- Illustrate addition and subtraction of fractions

Content Limits:

- Limit decimal numbers to the thousandths place
- Limit fractions to halves, thirds, fourths, fifths, sixths, eighths, tenths, twelfths, and sixteenths
- Limit mathematical and real-world contexts to age appropriate situations

ITEM SPECIFICATIONS

Primary Process Standards:

- Develop Strategies for Problem Solving
- Develop a Deep and Flexible Conceptual Understanding
- Develop the Ability to Communicate Mathematically
- Develop the Ability to Make Conjectures, Model, and Generalize

Distractor Domain:

- Computational errors
- Failure to discriminate place value
- Error in placement of decimal point
- Rounding errors
- Incorrect procedures
- Computational errors
- Scaling errors in estimation
- Use of incorrect equivalencies

7 **Todd bought a coat on sale for $29.95. He gave the clerk $40. Which is closest to the amount of change he should have received?**

A $60

B $20

C $15

D $10

Standard: 5.N.3.1 Estimate sums and differences of fractions with like and unlike denominators, mixed numbers, and decimals to assess the reasonableness of the results.

Depth-of-Knowledge: 2

This item is a DOK 2 because it requires the student to determine how to solve the problem and then find the closest, not the exact, answer.

Distractor Rationale:

A. The student rounded $29.95 to $20 and then added that to $40.

B. The student rounded $29.95 to $20.

C. The student computed the actual amount of change and then rounded the answer up to the next largest answer choice, $15.

D. Correct. The student demonstrated an ability to estimate a difference with decimals.

8 **Anna's assignment is to read for a total of 5 hours (hr) in two days. She read $2\frac{1}{4}$ hours on the first day. How many hours does Anna need to read on the second day to complete her assignment?**

A $2\frac{1}{4}$ hr

B $2\frac{3}{4}$ hr

C $3\frac{1}{4}$ hr

D $3\frac{3}{4}$ hr

Standard: 5.N.3.3 Add and subtract fractions with like and unlike denominators, mixed numbers, and decimals, using efficient and generalizable procedures, including but not limited to standard algorithms in order to solve real-world and mathematical problems including those involving money, measurement, geometry, and data.

Depth-of-Knowledge: 2

This item is a DOK 2 because it requires the student to determine how to approach the problem when subtracting a mixed number from a whole number.

Distractor Rationale:

A. The student thought she would read the same amount each day or confused $2\frac{1}{4}$ with $2\frac{1}{2}$.

B. Correct. The student demonstrated an ability to subtract a mixed number from a whole number.

C. The student subtracted the whole numbers and then thought the fraction would still be $\frac{1}{4}$.

D. The student made a regrouping error when subtracting.

OAS STRAND—ALGEBRAIC REASONING & ALGEBRA (A): STANDARD 5.A.1

OAS STANDARD

5.A.1 Describe and graph patterns of change created through numerical patterns.

OAS OBJECTIVES

5.A.1.1 Use tables and rules of up to two operations to describe patterns of change and make predictions and generalizations about real-world and mathematical problems.

5.A.1.2 Use a rule or table to represent ordered pairs of whole numbers and graph these ordered pairs on a coordinate plane, identifying the origin and axes in relation to the coordinates.

ITEM SPECIFICATIONS

Emphasis:

- Use tables and rules to describe patterns of change.
- Relate a rule or table to ordered pairs.
- Make predictions and generalizations about patterns.
- Demonstrate a working knowledge of the location of points on a coordinate plane.

Stimulus Attributes:

- Test items may include number lines, patterns, counting manipulatives, base-10 blocks, cubes, coordinate graphs, two-dimensional geometric figures, geoboards, other geometric manipulatives, tables, graphs, charts, maps, data sets, diagrams, and other diagrams.

Format:

- Use variables as unknowns
- Use variables as changing quantities
- Use variables in generalizations of patterns
- Use variables to describe general rules
- Identify the basic properties of arithmetic and use them to compute with whole numbers
- Identify mathematical and nonmathematical situations that are facilitated by the use of the arithmetic properties
- Identify the coordinates of an identified point on a coordinate plane or map
- Identify the point located at identified coordinates on a coordinate plane or map

Content Limits:

- Limit patterns to an extension of, at most, four places
- Limit required operations to addition, subtraction, multiplication, and division
- Limit description of rules to one variable
- Limit to 2 operations in order of operations from left to right
- Limit numbers to three-digit whole numbers
- Limit situations to using two of the basic properties of arithmetic
- Limit ordered pairs on the coordinate plane to whole numbers
- Limit real-world and mathematical contexts to age appropriate situations

ITEM SPECIFICATIONS

Primary Process Standards:

- Develop Strategies for Problem Solving
- Develop the Ability to Communicate Mathematically
- Develop Mathematical Reasoning
- Develop a Deep and Flexible Conceptual Understanding
- Develop the Ability to Make Conjectures, Model, and Generalize

Distractor Domain:

- Computational errors
- Predictable misrepresentation of the pattern
- Computational errors
- Failure to generalize or specify the appropriate property
- Common errors
- Incorrect procedures
- Incorrect use of rules or properties
- Incorrect interpretation of data display

9 **Misty created the number pattern below.**

32, 28, 24, 20, . . .

If *n* represents a number in this pattern, which rule could be used to find the next number in the pattern?

A $n + 4$

B $n - 4$

C $n \bullet 4$

D $n \div 4$

Standard: 5.A.1.1 Use tables and rules of up to two operations to describe patterns of change and make predictions and generalizations about real-world and mathematical problems.

Depth-of-Knowledge: 2

This item is a DOK 2 because it requires the student to first figure out the pattern and then explain the relationship between terms in the pattern using an algebraic expression.

Distractor Rationale:

A. The student chose an incorrect operation.

B. Correct. The student demonstrated an ability to describe a pattern of change with a rule.

C. The student chose an incorrect operation.

D. The student chose an incorrect operation.

10 **Nick started a chess club. The table shows the total number of members at the end of each month.**

Chess Club

Month	Total Members
1	2
2	5
3	9
4	14
5	20

Based on the pattern shown in the table, how many total members were in the club at the end of month 7?

A 27 members

B 32 members

C 35 members

D 54 members

Standard: 5.A.1.1 Use tables and rules of up to two operations to describe patterns of change and make predictions and generalizations about real-world and mathematical problems.

Depth-of-Knowledge: 2

This item is a DOK 2 because it requires the student to first determine the pattern and then use this rule to apply it to month 7.

Distractor Rationale:

A. The student found the total number of members who were in the club at the end of month 6.

B. The student saw that there were 6 more members from month 4 to 5 and thinks that there will be 6 more members each for months 6 and 7.

C. Correct. The student demonstrated an ability to use a table to describe a pattern of change.

D. The student computed 14 + 20 and added that to the 20 members in the club at the end of month 5.

OAS STRAND—ALGEBRAIC REASONING & ALGEBRA (A): STANDARD 5.A.2

OAS STANDARD

5.A.2 Understand and interpret expressions, equations, and inequalities involving variables and whole numbers, and use them to represent and evaluate real-world and mathematical problems.

OAS OBJECTIVES

5.A.2.1 Generate equivalent numerical expressions and solve problems involving whole numbers by applying the commutative, associative, and distributive properties and order of operations (no exponents).

5.A.2.2 Determine whether an equation or inequality involving a variable is true or false for a given value of the variable.

5.A.2.3 Evaluate expressions involving variables when values for the variables are given.

ITEM SPECIFICATIONS

Emphasis:

- Apply the use of the properties of arithmetic and the order of operations to solve problems.
- Determine whether an equation or inequality is true or false for a given value of a variable.
- Evaluate an expression for a given value of a variable.

Stimulus Attributes:

- Test items may include 10 blocks, cubes, other counting manipulatives, tables, graphs, sticks, number lines, charts, data sets, equivalency statements, algebraic expressions and equations, and strict and non-strict inequalities.

Format:

- Identify the basic properties of arithmetic and use them to compute with whole numbers
- Use variables as unknowns
- Substitute numerical values for variables in algebraic expressions
- Use the rules for order of operations with whole numbers to find the value of algebraic expressions
- Substitute a value for a variable and determine whether an equation or inequality is true or false
- Items may include parentheses

Content Limits:

- Limit numbers to three-digit whole numbers
- Limit situations to using two of the basic properties of arithmetic
- Limit unknowns to 2-digit whole numbers
- Limit algebraic equations to one type of operation
- Limit operations to addition, subtraction, multiplication, and division
- Limit the number of variables in an expression to one
- Limit values of the variable to two-digit whole numbers

ITEM SPECIFICATIONS

Primary Process Standards:

- Develop Strategies for Problem Solving
- Develop the Ability to Communicate Mathematically
- Develop Mathematical Reasoning
- Develop a Deep and Flexible Conceptual Understanding
- Develop the Ability to Make Conjectures, Model, and Generalize

Distractor Domain:

- Computational errors
- Inappropriate operations selected
- Common errors
- Incorrect procedures
- Incorrect use of rules or properties
- Order of operations errors
- Misidentification of related operations

11 Which expression is equivalent to $(4 \times 8) + (4 \times 3)$?

A $4 + (8 \times 3)$

B $4 + (8 + 3)$

C $4 \times (8 \times 3)$

D $4 \times (8 + 3)$

Standard: 5.A.2.1 Generate equivalent numerical expressions and solve problems involving whole numbers by applying the commutative, associative, and distributive properties and order of operations (no exponents).

Depth-of-Knowledge: 2

This item is a DOK 2 because it requires the student to apply the distributive property to identify equivalent expressions.

Distractor Rationale:

A. The student swapped multiplication and addition.

B. The student thought addition and multiplication are interchangeable.

C. The student thought addition and multiplication are interchangeable.

D. Correct. The student demonstrated an ability to generate equivalent numerical expressions involving whole numbers using the distributive property.

12 **Elise handed out paper to 8 students. Each student received 3 pieces of yellow paper, 4 pieces of red paper, and 2 pieces of black paper. Elise wrote this expression to show the total number of pieces of paper she handed out.**

$$8 \times (3 + 4 + 2)$$

Which is equivalent to the expression Elise wrote?

A $(8 \times 3) + (4 + 2)$

B $(8 + 3) + (8 + 4) + (8 + 2)$

C $(8 + 3) \times (8 + 4) \times (8 + 2)$

D $(8 \times 3) + (8 \times 4) + (8 \times 2)$

Standard: 5.A.2.1 Generate equivalent numerical expressions and solve problems involving whole numbers by applying the commutative, associative, and distributive properties and order of operations (no exponents).

Depth-of-Knowledge: 2

This item is a DOK 2 because it requires the student to apply the distributive property to identify equivalent expressions.

Distractor Rationale:

A. The student did not realize that the multiplication sign needs to apply to the 4 and 2 as well as the 3.

B. The student did not understand how to apply the multiplication sign before the addition expression.

C. The student did not understand how to apply the multiplication sign before the addition expression.

D. **Correct. The student demonstrated an ability to generate equivalent numerical expressions by applying the distributive property.**

13 **An expression is shown.**

$$15 - 2x$$

What is the value of this expression when $x = 4$?

A 7

B 9

C 23

D 52

Standard: 5.A.2.3 Evaluate expressions involving variables when values for the variables are given.

Depth-of-Knowledge: 2

This item is a DOK 2 because it requires the student to substitute 4 for *x* and then find the value of the expression.

Distractor Rationale:

A. **Correct. The student demonstrated an ability to evaluate an expression involving a variable when a value for the variable is given.**

B. The student computed 15 − (2 + 4) instead of 15 − (2 × 4).

C. The student added instead of subtracted.

D. The student selected because both 5 and 2 are in the expression.

OAS STRAND—GEOMETRY & MEASUREMENT (GM): STANDARD 5.GM.1

OAS STANDARD

5.GM.1 Describe, classify, and draw representations of two- and three-dimensional figures.

OAS OBJECTIVES

5.GM.1.1 Describe, classify, and construct triangles, including equilateral, right, scalene, and isosceles triangles. Recognize triangles in various contexts.

5.GM.1.2 Describe and classify three-dimensional figures including cubes, rectangular prisms, and pyramids by the number of edges, faces, or vertices, as well as the shapes of faces.

5.GM.1.3 Recognize and draw a net for a three-dimensional figure (e.g., cubes, rectangular prisms, pyramids).

ITEM SPECIFICATIONS

Emphasis:

- Describe, classify, and construct triangles.
- Describe and classify three-dimensional figures.
- Recognize and draw a net for a three-dimensional figure.

Stimulus Attributes:

- Test items may include illustrations of the following: tables, graphs, protractors, two-dimensional geometric shapes, three-dimensional geometric shapes, geoboards, and other geometric manipulatives.

Format:

- Identify, compare, and analyze attributes of triangles
- Construct triangles based on given attributes
- Classify triangles by their attributes
- Identify, compare, and analyze attributes of three-dimensional figures
- Classify three-dimensional figures by their attributes
- Recognize and draw a net for a three-dimensional figure

Content Limits:

- Triangles can include equilateral, right, scalene, and isosceles
- Three-dimensional figures can include cubes, rectangular prisms, and pyramids

Primary Process Standards:

- Develop the Ability to Communicate Mathematically
- Develop Mathematical Reasoning
- Develop a Deep and Flexible Conceptual Understanding
- Develop the Ability to Make Conjectures, Model, and Generalize

Distractor Domain:

- Failure to discriminate figures or figure characteristics
- Failure to identify characteristics of the net

14 **Lorelei counted the faces on some three-dimensional figures. She found two figures with exactly 5 faces each. Which two figures have exactly 5 faces each?**

A rectangular prism and triangular prism

B rectangular pyramid and triangular pyramid

C rectangular prism and triangular pyramid

D rectangular pyramid and triangular prism

Standard: 5.GM.1.2 Describe and classify three-dimensional figures including cubes, rectangular prisms, and pyramids by the number of edges, faces or vertices as well as the shapes of faces.

Depth-of-Knowledge: 2

This item is a DOK 2 because it requires the student to describe two different three-dimensional figures, identifying the figures with exactly 5 faces.

Distractor Rationale:

A. The student focused on the triangular prism.

B. The student focused on the rectangular pyramid.

C. Balance distractor

D. Correct. The student demonstrated an ability to describe three-dimensional figures by the number of faces.

15 **Wade drew a square pyramid for his art project.**

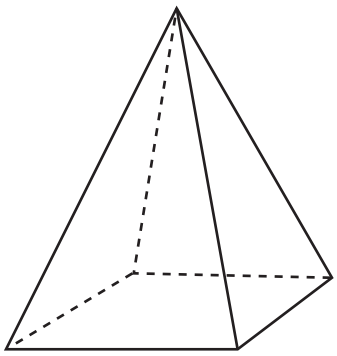

Which statement is true of the square pyramid?

A The square pyramid has 8 faces.

B The square pyramid has 2 bases.

C The square pyramid has 5 vertices.

D The square pyramid has a triangular base.

Standard: 5.GM.1.2 Describe and classify three-dimensional figures including cubes, rectangular prisms, and pyramids by the number of edges, faces or vertices as well as the shapes of faces.

Depth-of-Knowledge: 1

This item is a DOK 1 because it requires the student to recalls facts and definitions related to a square pyramid.

Distractor Rationale:

A. The student confused faces and edges.

B. The student confused square pyramids and square prisms (cubes).

C. Correct. The student demonstrated an ability to describe a square pyramid by the number of edges, faces, or vertices as well as the shape of faces.

D. The student confused base and face.

16 **A net of a three-dimensional figure is shown.**

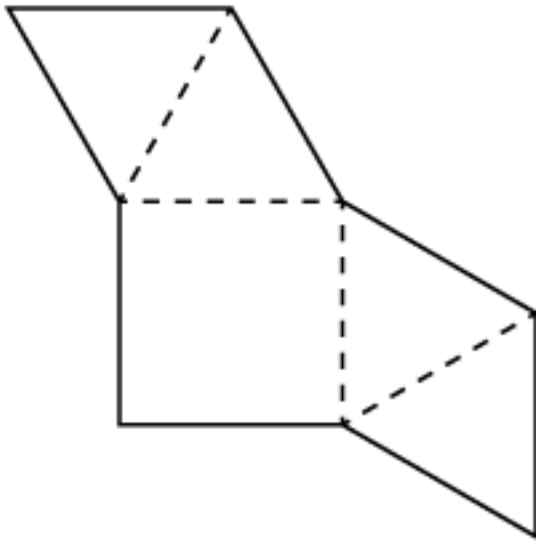

Which three-dimensional figure does this net represent?

A cube

B square pyramid

C rectangular prism

D triangular pyramid

Standard: 5.GM.1.3 Recognize and draw a net for a three-dimensional figure (e.g., cubes, rectangular prisms, pyramids).

Depth-of-Knowledge: 1

This item is a DOK 1 because it requires the student to recall the fact of what the net of a square pyramid looks like.

Distractor Rationale:

A. The student focused only on the square base.

B. Correct. The student demonstrated an ability to recognize a net for a three-dimensional figure.

C. The student focused only on the rectangular base.

D. The student focused only on the triangular faces.

OAS STRAND—GEOMETRY & MEASUREMENT (GM): STANDARD 5.GM.2

OAS STANDARD

5.GM.2 Understand how the volume of rectangular prisms and the surface area of shapes with polygonal faces are determined by the dimensions of the object, and that shapes with varying dimensions can have equivalent values of surface area or volume.

OAS OBJECTIVES

5.GM.2.1 Recognize that the volume of rectangular prisms can be determined by the number of cubes (n) and by the product of the dimensions of the prism ($a \times b \times c = n$). Know that rectangular prisms of different dimensions (p, q, and r) can have the same volume if $a \times b \times c = p \times q \times r = n$.

5.GM.2.2 Recognize that the surface area of a three-dimensional figure with rectangular faces with whole numbered edges can be found by finding the area of each component of the net of that figure. Know that three-dimensional shapes of different dimensions can have the same surface area.

5.GM.2.3 Find the perimeter of polygons and create arguments for reasonable values for the perimeter of shapes that include curves.

ITEM SPECIFICATIONS

Emphasis:

- Determine the volume of a rectangular prism.
- Determine the surface area of a three-dimensional figure with rectangular faces by finding the area of each component of the net of that figure.
- Find the perimeter of polygons and estimate the perimeter of a curved shape.

Stimulus Attributes:

- Test items may include rectangular prisms, other geometric solids, diagrams of rectangles or squares, dot grids, geoboards, and other geometric manipulatives.

Format:

- Determine the surface area of rectangular prisms using a net of the prism
- Identify and apply strategies for determining volume and surface area of other three-dimensional solids
- Find the perimeter of a polygon
- Determine the number of square tiles that would be needed to build a rectangle of a certain area or perimeter
- Compare the dimensions and volumes of different rectangular prisms
- Compare the dimensions and surface area of different three-dimensional shapes
- Estimate the perimeter of a curved shape

Content Limits:

- Limit solids to rectangular prisms and three-dimensional shapes that have rectangular faces
- Limit dimensions of figures to whole numbers

Primary Process Standards:

- Develop Strategies for Problem Solving
- Develop the Ability to Communicate Mathematically
- Develop Mathematical Reasoning
- Develop a Deep and Flexible Conceptual Understanding
- Develop the Ability to Make Conjectures, Model, and Generalize

ITEM SPECIFICATIONS

Distractor Domain:

- Computational errors
- Incorrect procedures
- Interchange volume and surface area
- Inappropriate formulas

17 What is the perimeter, in centimeters (cm), of this parallelogram?

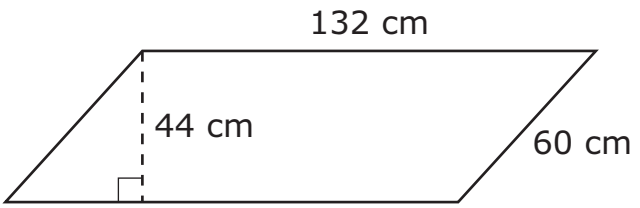

A 192

B 236

C 384

D 428

Standard: 5.GM.2.3 Find the perimeter of polygons and create arguments for reasonable values for the perimeter of shapes that include curves.

Depth-of-Knowledge: 2

This item is a DOK 2 because it requires the student to find the perimeter of a parallelogram when the lengths of only two sides are labeled.

Distractor Rationale:

A. The student computed 132 + 60.

B. The student added the numbers labeled on the figure.

C. Correct. The student demonstrated an ability to find the perimeter of a parallelogram.

D. The student included the height as part of the perimeter and computed 132 + 60 + 132 + 60 + 44.

18 **Pedro wants to buy an aquarium in the shape of a rectangular prism for his fish. He will choose from four options.**

Which aquarium will have the greatest volume?

A

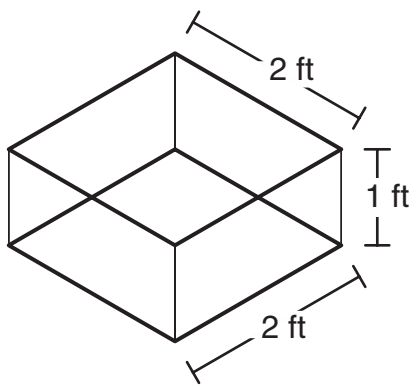

B

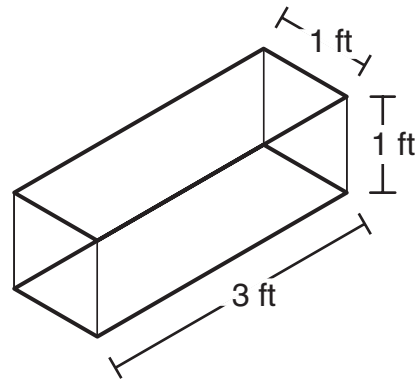

C

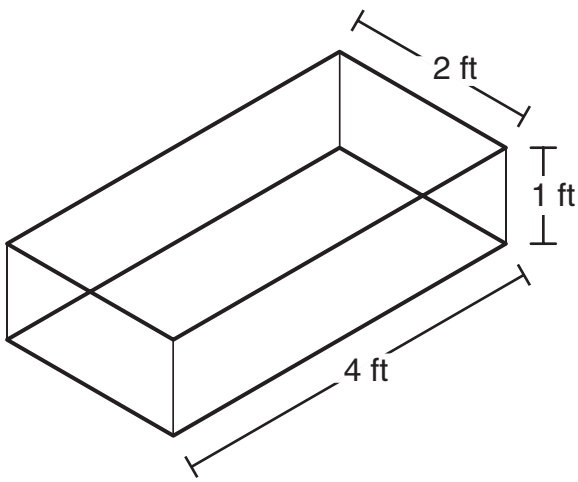

D

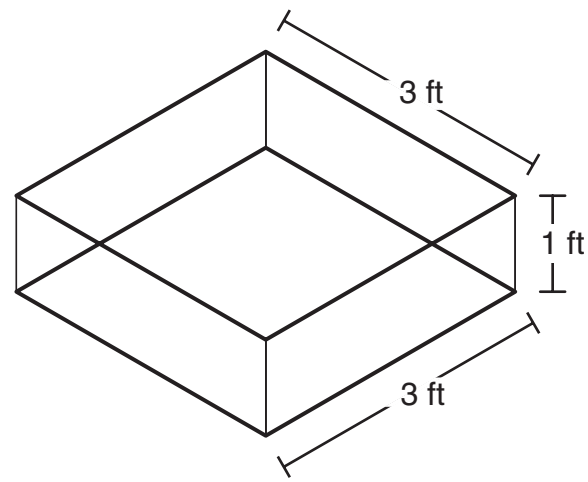

Standard: 5.GM.2.1 Recognize that the volume of rectangular prisms can be determined by the number of cubes (n) and by the product of the dimensions of the prism ($a \times b \times c = n$). Know that rectangular prisms of different dimensions (p, q, and r) can have the same volume if $a \times b \times c = p \times q \times r = n$.

Depth-of-Knowledge: 2

This item is a DOK 2 because it requires the student to find the volume of four rectangular prisms and then determine the one with the largest volume.

Distractor Rationale:

A. The student made a multiplication error.

B. The student made a multiplication error or thought Pedro wanted the aquarium with the least volume.

C. The student chose the aquarium with the greatest single dimension.

D. Correct. The student demonstrated an ability to find the volume of rectangular prisms.

OAS STRAND—GEOMETRY & MEASUREMENT (GM): STANDARD 5.GM.3

OAS STANDARD

5.GM.3 Understand angle and length as measurable attributes of real-world and mathematical objects. Use various tools to measure angles and lengths.

OAS OBJECTIVES

5.GM.3.1 Measure and compare angles according to size.

5.GM.3.2 Choose an appropriate instrument and measure the length of an object to the nearest whole centimeter or 1/16-inch.

5.GM.3.3 Recognize and use the relationship between inches, feet, and yards to measure and compare objects.

5.GM.3.4 Recognize and use the relationship between millimeters, centimeters, and meters to measure and compare objects.

ITEM SPECIFICATIONS

Emphasis:

- Measure and compare angles according to size.
- Choose an appropriate instrument and measure the length of an object.
- Make comparisons among objects with metric measurements and among objects with customary measurements.

Stimulus Attributes:

- Test items may include coordinate graphs, geometric figures, protractors, geoboards, other geometric manipulatives, measuring instruments, tables, graphs, charts, pictures, diagrams, maps, scale drawings, circle graphs, other diagrams, diagrams of two- and three-dimensional figures, rulers, protractors, thermometers, beakers, or other measuring instruments.

Format:

- Identify and compare angle measures in mathematical situations and in real-world contexts
- Identify appropriate unit and instrument of measure needed to solve a length problem
- Compare objects with different metric units
- Compare objects with different customary units
- Use a ruler to measure length to the nearest whole centimeter or 1/16-inch
- Compare lengths of objects

Content Limits:

- Limit angle measures to whole numbers no greater than 180 degrees
- Limit units of length to millimeter, centimeter, meter, inch, foot, or yard
- Limit length to nearest whole centimeter or 1/16-inch

ITEM SPECIFICATIONS

Primary Process Standards:

- Develop Strategies for Problem Solving
- Develop a Deep and Flexible Conceptual Understanding
- Develop Mathematical Reasoning
- Develop the Ability to Make Conjectures, Model, and Generalize

Distractor Domain:

- Common errors
- Computational errors
- Identify inappropriate unit of measure
- Incorrect use of measurement instrument
- Select inappropriate measurement instrument
- Inaccurate reading of measurement instrument

19 **Which angle has the <u>greatest</u> measure?**

A

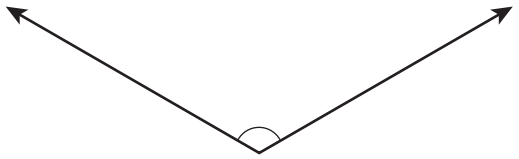

B

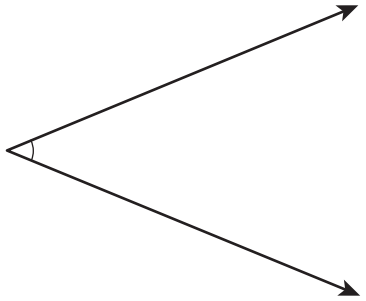

C

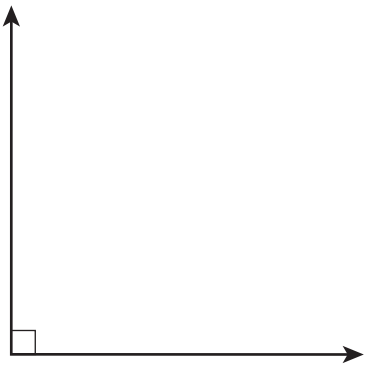

D

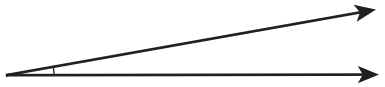

Standard: 5.GM.3.1 Measure and compare angles according to size.

Depth-of-Knowledge: 2

This item is a DOK 2 because it requires the student to compare angle measures and find the one with the greatest measure.

Distractor Rationale:

A. **Correct. The student demonstrated an ability to compare angles according to size.**
B. Balance distractor
C. The student thought right angles are always largest.
D. The student confused largest and smallest.

20 **A picture of a city is shown.**

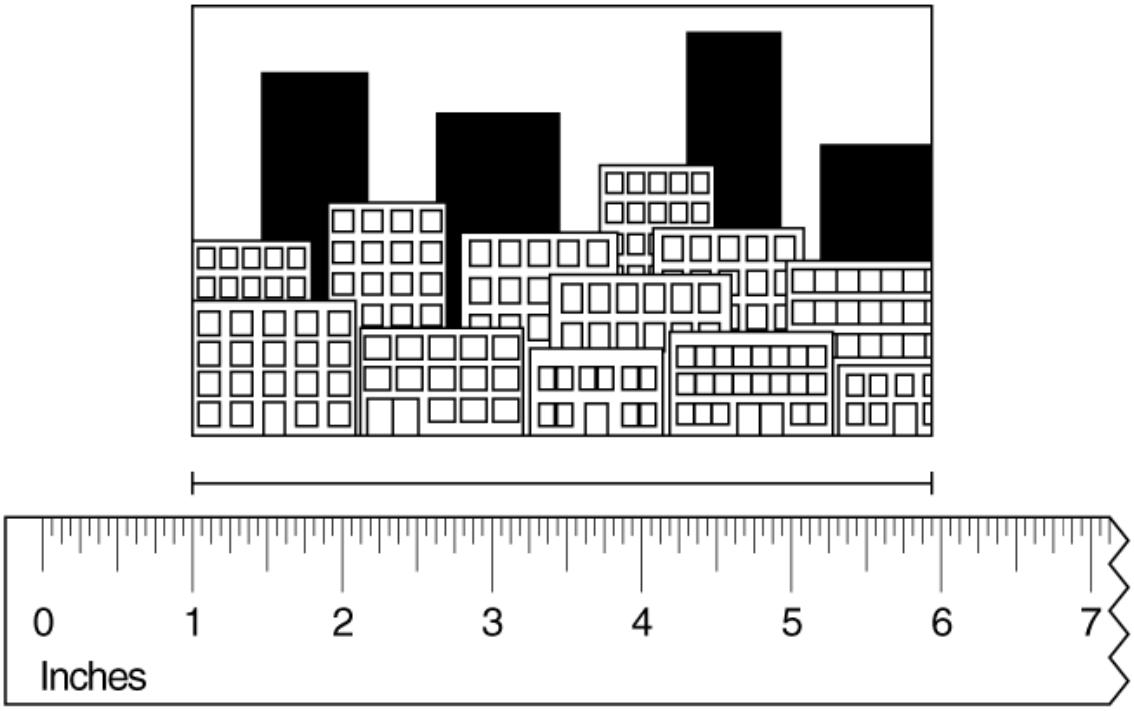

What is the length of this picture to the nearest $\frac{1}{16}$ of an inch?

A $4\frac{1}{16}$ inches

B $4\frac{15}{16}$ inches

C $5\frac{1}{16}$ inches

D $5\frac{15}{16}$ inches

Standard: 5.GM.3.2 Choose an appropriate instrument and measure the length of an object to the nearest whole centimeter or $\frac{1}{16}$-inch.

Depth-of-Knowledge: 1

This item is a DOK 1 because it requires the student to perform a simple procedure, measuring using a ruler.

Distractor Rationale:

A. Balance distractor

B. Correct. The student demonstrated an ability to measure the length of an object to the nearest $\frac{1}{16}$-inch.

C. The student confused $\frac{1}{16}$ less than 5 inches with $\frac{1}{16}$ greater than 5 inches.

D. The student did not take into account that the picture begins at 1 inch, not 0 inches.

OAS STRAND—DATA & PROBABILITY (D): STANDARD 5.D.1

OAS STANDARD

5.D.1 Display and analyze data to find the range and measures of central tendency (mean, median, and mode).

OAS OBJECTIVES

5.D.1.1 Find the measures of central tendency (mean, median, or mode) and range of a set of data. Understand that the mean is a "leveling out" or central balance point of the data.

5.D.1.2 Create and analyze line and double-bar graphs with whole numbers, fractions, and decimal increments.

ITEM SPECIFICATIONS

Emphasis:

- Find the mean, median, mode, and range of a set of data.
- Create and analyze line and double-bar graphs.

Stimulus Attributes:

- Test items may include lists, tables, graphs, charts, middle, data sets, number lines, line graphs, bar graphs, pictographs, frequency charts, Venn diagrams, line plots, scatter plots, stem-and-leaf plots, histograms, circle graphs, spreadsheets, other diagrams, and any of the following terms: range, spread, mode, most often, median, or average.

Format:

- Translate information in data through spread, frequency, and middle
- Compare how representations of data support inferences and predictions
- Given a set of data, the student will determine mean, median, mode, and range
- Items may include comparisons between mean, median, mode, and range
- Compare how representations of data support inferences and predictions
- Translate between representations of data
- Solve mathematical and real-world problems based on data presented in a variety of formats
- Read and interpret data presented in a variety of formats
- Analyze how representations of data influence inferences and predictions
- Item may include model or names of graphs in options
- Compare how graphic representations of data support inferences and predictions
- Select appropriate representations of data, such as line and double-bar graphs
- Use data to create and analyze line and double-bar graphs

Content Limits:

- Limit to descriptor of range, mode, mean and median
- Limit data sets to 10 pieces of data
- Limit data sets to numerical data
- Limit graphs to line and double-bar graphs
- Limit scale on line graphs and double-bar graphs to decimal increments of 0.1, 0.2, 0.25, and 0.5, and fractional increments to halves, fourths, fifths, and tenths.

STANDARD 5.D.1 continued

ITEM SPECIFICATIONS

Primary Process Standards:

- Develop Strategies for Problem Solving
- Develop the Ability to Communicate Mathematically
- Develop Mathematical Reasoning
- Develop a Deep and Flexible Conceptual Understanding
- Develop the Ability to Make Conjectures, Model, and Generalize

Distractor Domain:

- Misreported data
- Miscalculation
- Unsupportable conclusions
- Incorrect choice of measure
- Incorrect procedures
- Misunderstanding of concepts
- Inappropriate representations
- Common errors
- Incorrect or incomplete data display
- Incorrect interpretation of data display

21 **This table shows the high temperatures for some Oklahoma cities in January 2010.**

High Temperatures

City	Temperature (°F)
Arnett	67
Beaver	70
Boise City	64
Buffalo	68
Goodwell	67
Kenton	64
Slapout	70

What is the range of these high temperatures?

A 2°

B 3°

C 4°

D 6°

Standard: 5.D.1.1 Find the measures of central tendency (mean, median, or mode) and range of a set of data. Understand that the mean is a "leveling out" or central balance point of the data.

Depth-of-Knowledge: 2

This item is a DOK 2 because it requires the student to identify the high and low temperatures in a table and then use these to calculate the range.

Distractor Rationale:

A. The student found the different between the highest temperature and the second highest temperature.

B. The student found the range for the first and last temperatures in the table.

C. Balance distractor

D. Correct. The student demonstrated an ability to find the range of a set of data.

22 **The graph below shows how much Tisha spent on movie tickets for the first six months of two different years.**

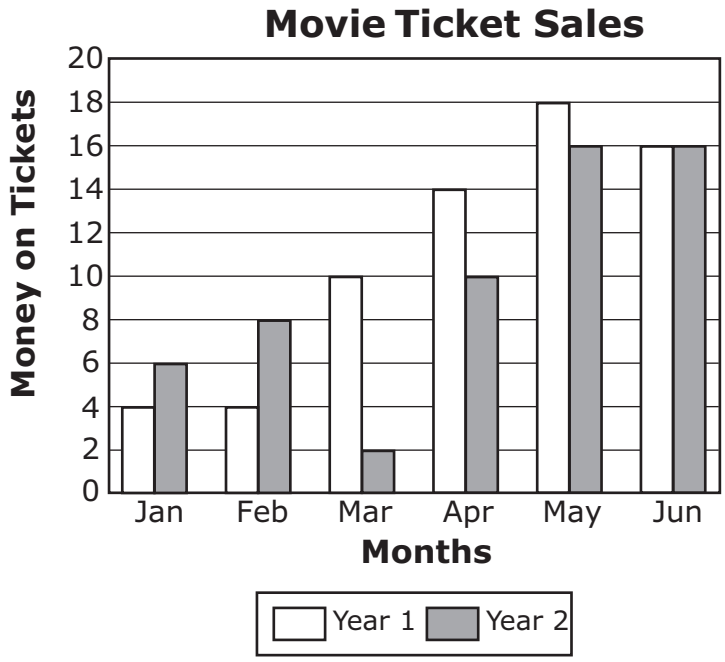

Which month had the <u>greatest</u> difference in the amount of money spent on movie tickets between year 1 and year 2?

A March

B April

C May

D June

Standard: 5.D.1.2 Create and analyze line and double-bar graphs with whole numbers, fractions, and decimals increments.

Depth-of-Knowledge: 2

This item is a DOK 2 because it requires the student to use a double bar graph to answer a question about the data.

Distractor Rationale:

A. **Correct. The student demonstrated an ability to analyze a double-bar graph with whole numbers.**

B. Balance distractor

C. The student chose the month with the highest bar in the graph.

D. The student did not know what difference means and identified two bars with the same height in the graph.

23 **The heights, in centimeters, of some bean plants are listed.**

14, 19, 19, 26, 27, 32, 32, 32, 33

What is the median height of these bean plants?

A 19 centimeters

B 26 centimeters

C 27 centimeters

D 32 centimeters

Standard: 5.D.1.1 Find the measures of central tendency (mean, median, or mode) and range of a set of data. Understand that the mean is a "leveling out" or central balance point of the data.

Depth-of-Knowledge: 1

This item is a DOK 1 because it requires the student to recall the definition of median.

Distractor Rationale:

A. The student confused median and mode and did not see that 32 is actually the mode.

B. The student confused median and mean.

C. Correct. The student demonstrated an ability to find the median of a set of data.

D. The student confused median and mode.

Cluster Items

The following sample items are part of a cluster. The cluster is presented first and then the two items that follow require use of the cluster. The two items are from different standards.

Use the information to answer the following two questions.

A baker made 64 doughnuts at his bakery on Monday.

24 The baker continues to make the same number of doughnuts each day. How many days will it take to make an additional 768 doughnuts?

A 10 days

B 12 days

C 100 days

D 120 days

Standard: 5.N.1.2 Divide multi-digit numbers, by one- and two-digit divisors, using efficient and generalizable procedures, based on knowledge of place value, including standard algorithms.

Depth-of-Knowledge: 2

This item is a DOK 2 because it requires the student to determine the appropriate operation and then perform division with a two-digit divisor.

Distractor Rationale:

A. The student made a division error.

B. Correct. The student demonstrated an ability to divide a multi-digit number by two-digit divisor.

C. The student made division and place value errors.

D. The student made a place value error.

25 The baker wants to put his doughnuts into boxes. Each box holds 12 doughnuts. What is the total number of boxes the baker can fill, and the total number of doughnuts he will have left over?

A 8 boxes with 6 doughnuts left over

B 6 boxes with 8 doughnuts left over

C 5 boxes with 4 doughnuts left over

D 4 boxes with 5 doughnuts left over

Standard: 5.N.1.3 Recognize that quotients can be represented in a variety of ways, including a whole number with a remainder, a fraction or mixed number, or a decimal and consider the context in which a problem is situated to select and interpret the most useful form of the quotient for the solution.

Depth-of-Knowledge: 2

This item is a DOK 2 because it requires the student to complete a division problem and then make a decision about what to do with the remainder.

Distractor Rationale:

A. Balance distractor

B. The student computed 6 × 12 = 72 and then thought the 8 as left over meant subtraction.

C. Correct. The student demonstrated an ability to represent a quotient as a number and an amount left over.

D. The student confused the number of boxes and the number left over.

OKLAHOMA STATE DEPARTMENT OF
EDUCATION
CHAMPION EXCELLENCE